AXOR

Brand	AXOR
Art. Name	**AXOR Citterio C** Showerhead 120/120 1-Jet with Showerarm, 1.8 GPM
Art. Nr.	28812341
Surface	Brushed Black Chrome
Pos.	1

Product Picture

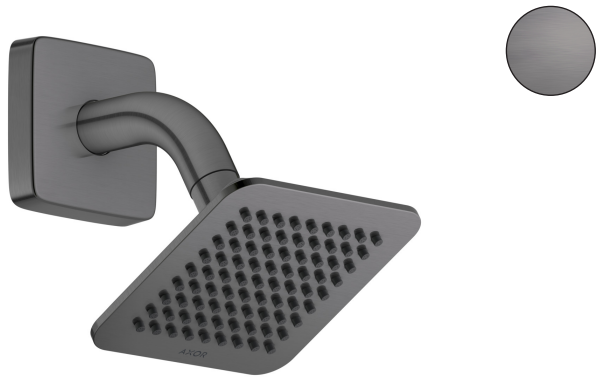

Drawing

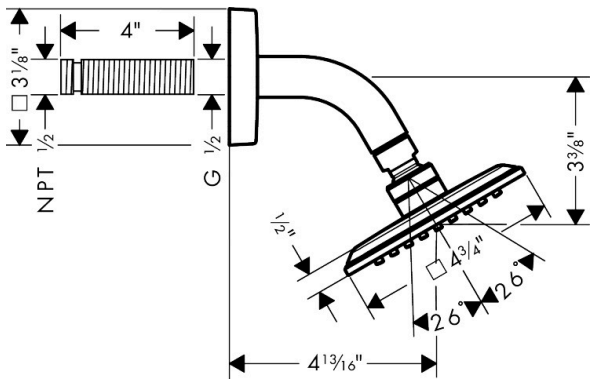

Features

- Consists of: showerhead, showerarm
- Showerhead size: 4" x 4"
- Spray type: PowderRain
- Maximum flow rate : 1.8 GPM
- Projection: 4 7/8"
- Spray disc surface: fully finished matching spray face
- Showerhead removable for cleaning

Technology

Spray Types