AXOR

Brand	AXOR
Art. Name	**AXOR Citterio C** Showerhead 120/120 1-Jet with Showerarm, 2.5 GPM
Art. Nr.	28811831
Surface	Polished Nickel
Pos.	1

Product Picture

Drawing

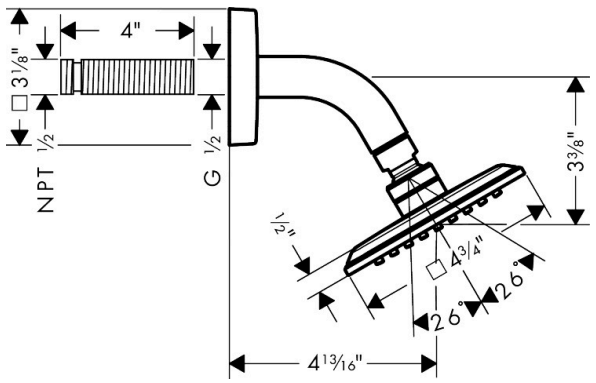

Features

- Consists of: showerhead, showerarm
- Showerhead size: 4" x 4"
- Spray type: PowderRain
- Maximum flow rate : 2.5 GPM
- Projection: 4 7/8"
- Spray disc surface: fully finished matching spray face
- Showerhead removable for cleaning

Technology

Spray Types

Codes / Standards

- cUPC/IAPMO/3016/showers/2,5gpm