Camden Collection
G-6955-LM48B-T
Camden Deck-Mounted Handshower & Diverter Set

Product Features

- Matches G-6950-LM48B Roman tub set
- Handshower hose included

Available Finishes
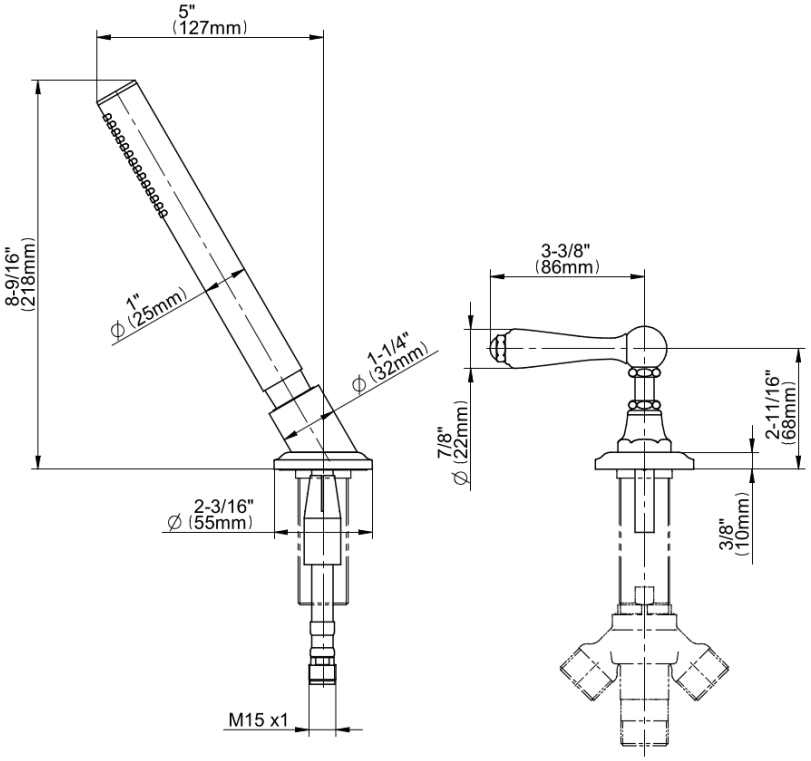
Camden Collection
G-6955-LM48B-T
Camden Deck-Mounted Handshower & Diverter Set