G-9802
Tumbler & Holder

Available Finishes
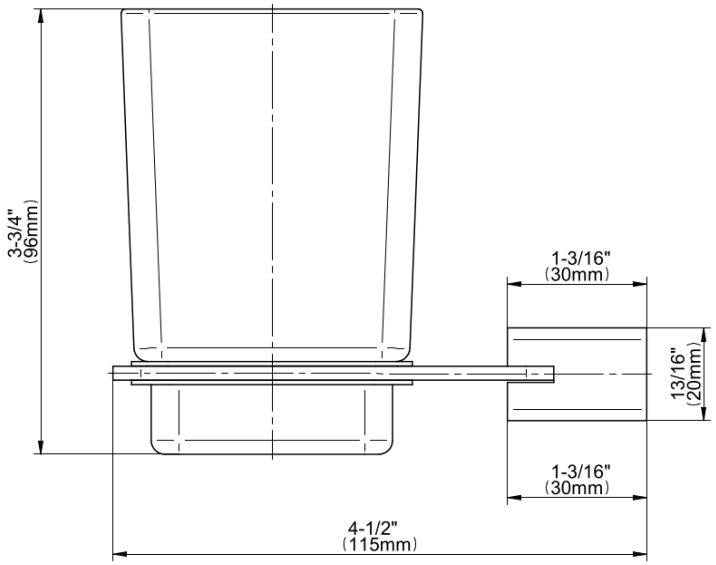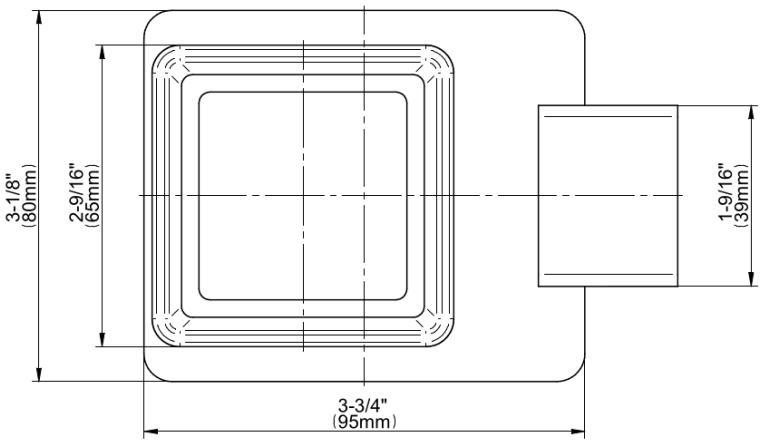
G-9802
Tumbler & Holder