Phase Collection
G-6605A-LM45
Phase Vessel Lavatory Faucet

Product Features

- Single-hole installation
- Aerated flow rate ?1.2 max gpm
- 1-1/4" hole cutout
- Drain assembly not included
- Optional Matching Decorative Trap G-9970

Code compliance

- ADA
- CALGreen

Available Finishes
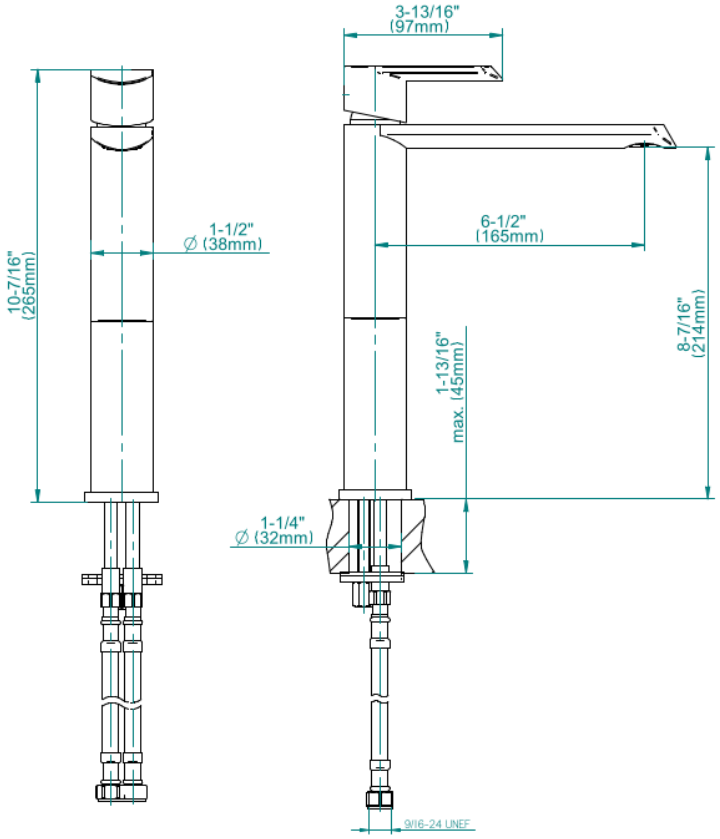
Phase Collection
G-6605A-LM45
Phase Vessel Lavatory Faucet