Segovia Collection
G-9919
Dishwasher Air Gap

Product Features

- Solid metal cap in finishes that match kitchen faucets
- Includes plastic body
- Prevents back siphoning into dishwasher

Available Finishes
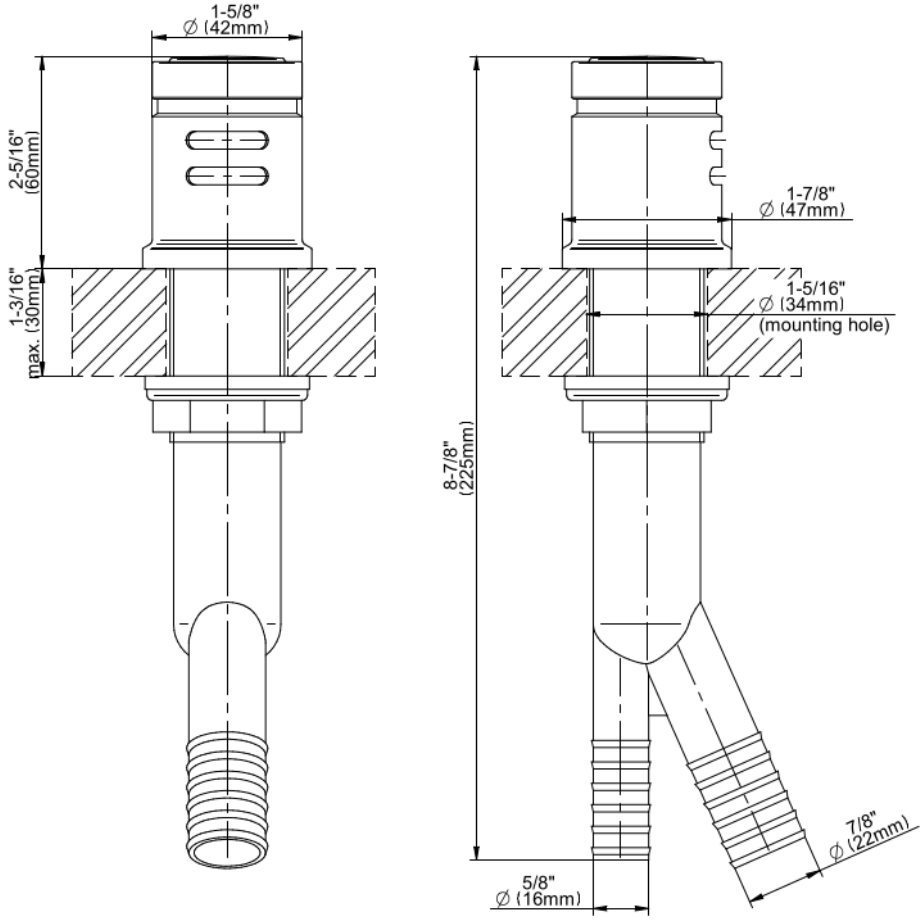
Segovia Collection
G-9919
Dishwasher Air Gap