M.E. Collection
G-9129
Tumbler & Holder

Available Finishes
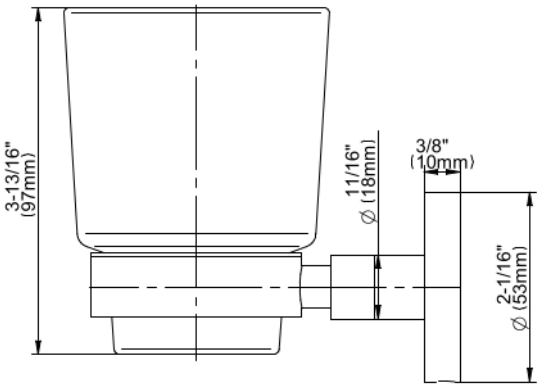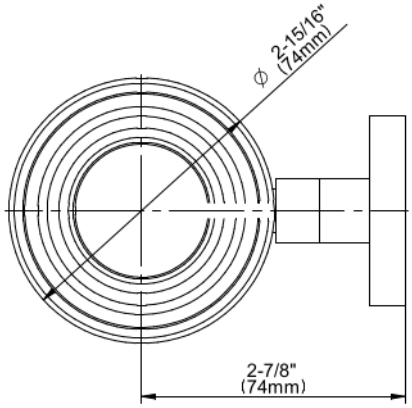
M.E. Collection
G-9129
Tumbler & Holder