G-19202A
Tumbler and Holder

Available Finishes

G-19202A
Tumbler and Holder
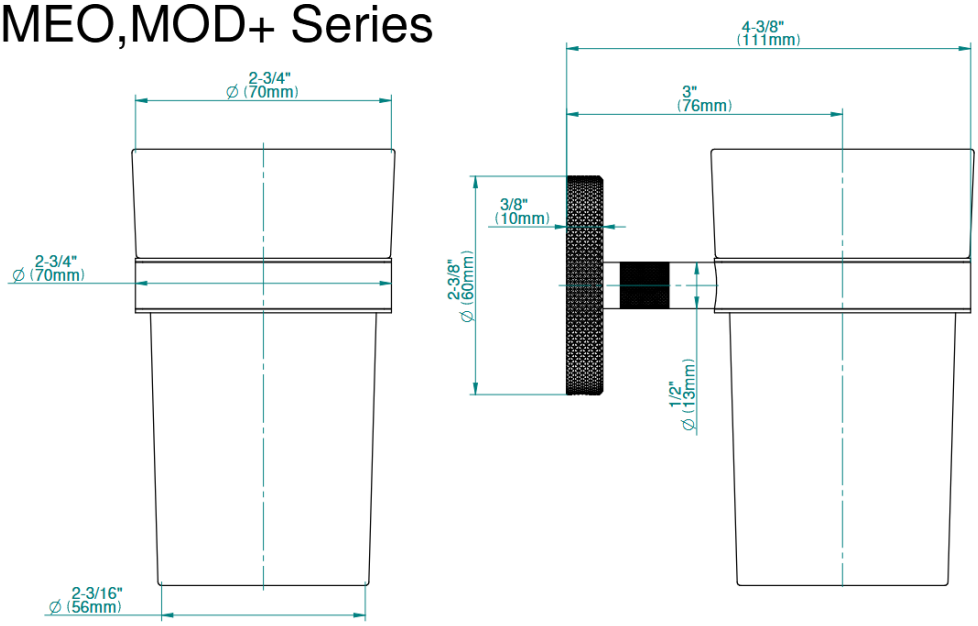
CAMEO,MOD+ Series