Sento Collection
G-6305-LM61L
Sento Vessel Faucet

Product Features

- Single-hole Installation
- Aerated flow rate ?1.2 max gpm
- 1-1/4" hole cutout
- Drain assembly not included
- Optional matching decorative trap G-9970

Code compliance

- ADA
- CALGreen

Available Finishes
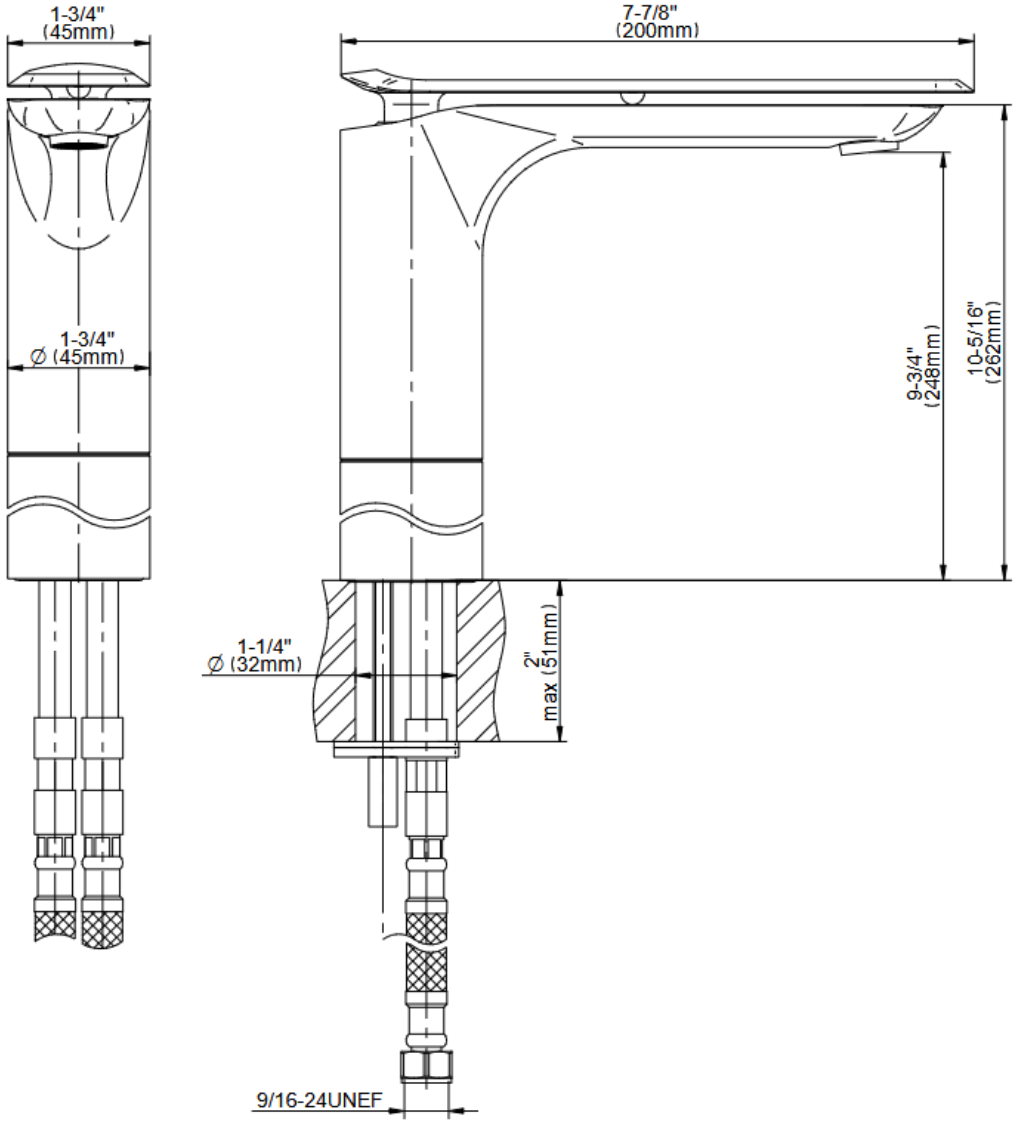
Sento Collection
G-6305-LM61L
Sento Vessel Faucet