Topaz Collection
G-8560
7" Octagonal Tub Spout

Product Features

- Includes spout ring
- 1/2
- Matches Topaz Series
- Tub spout flow rate ~ 19.8 gpm @60 psi
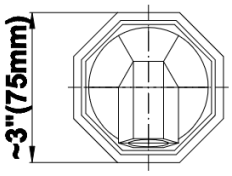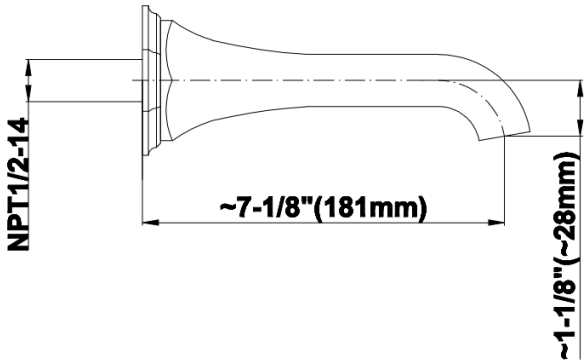
Available Finishes