RIVA Collection
G-18201WCDD
RIVA Contemporary wall-mount diamond knurl LED with wall-mount button

Product Features

- 785 lumens
- Color temperature is 4000 K

Available Finishes

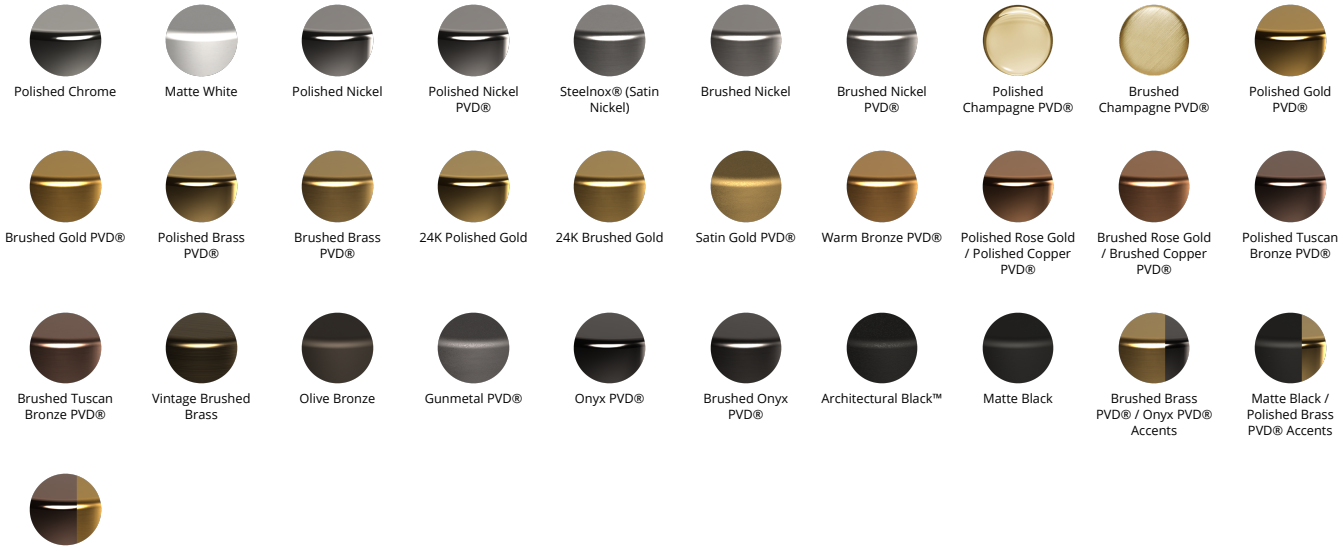
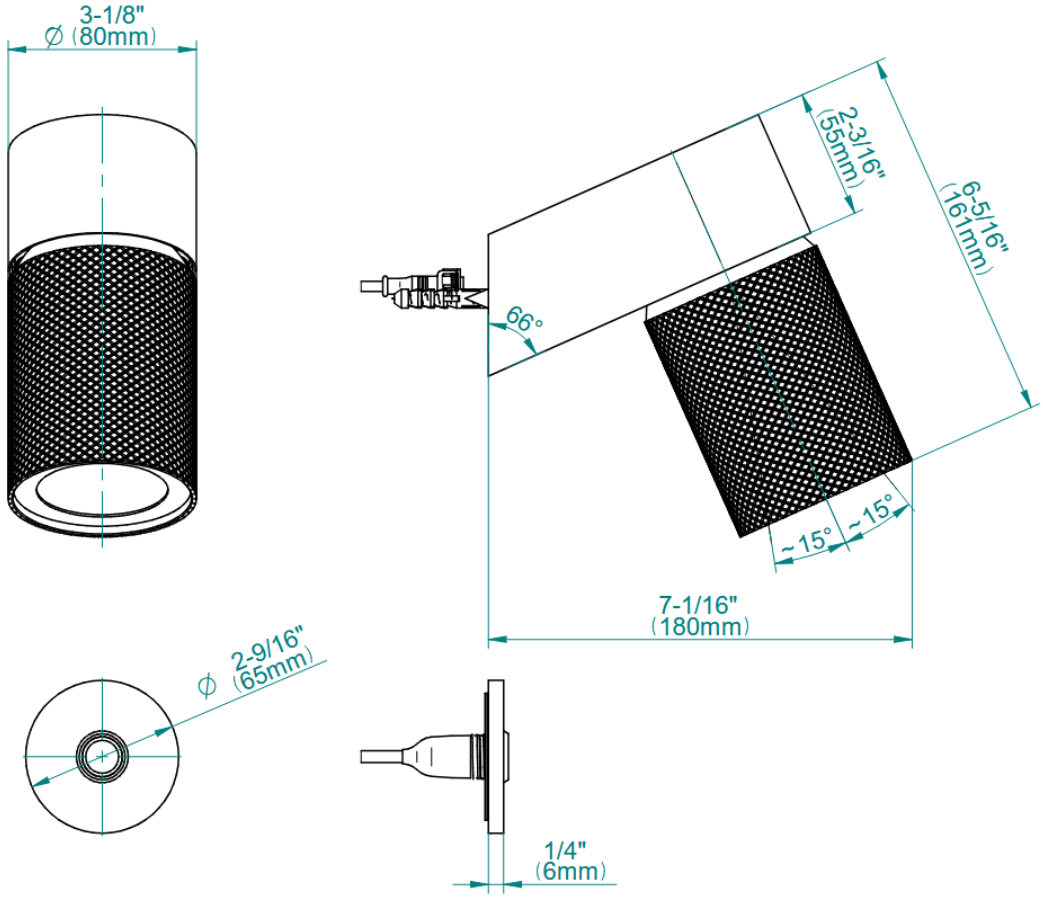
RIVA Collection
G-18201WCDD
RIVA Contemporary wall-mount diamond knurl LED with wall-mount button