RIVA Collection
G-18201WTDF
RIVA Traditional wall-mount fluted knurl LED with wall-mount button

Product Features

- 785 lumens
- Color temperature is 4000 K

Available Finishes

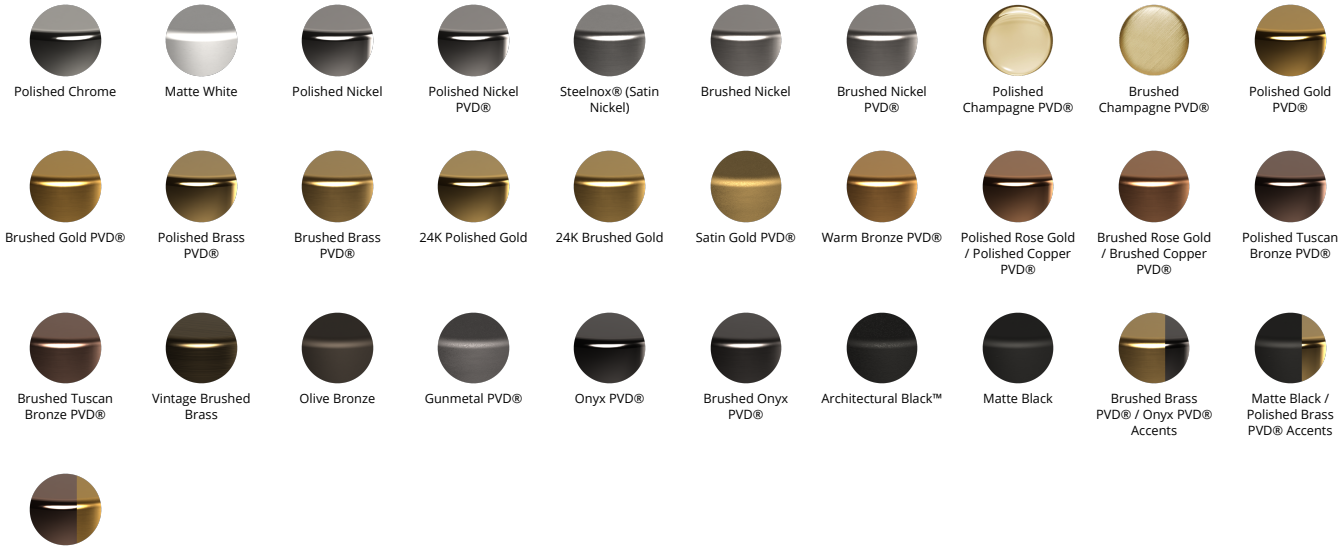
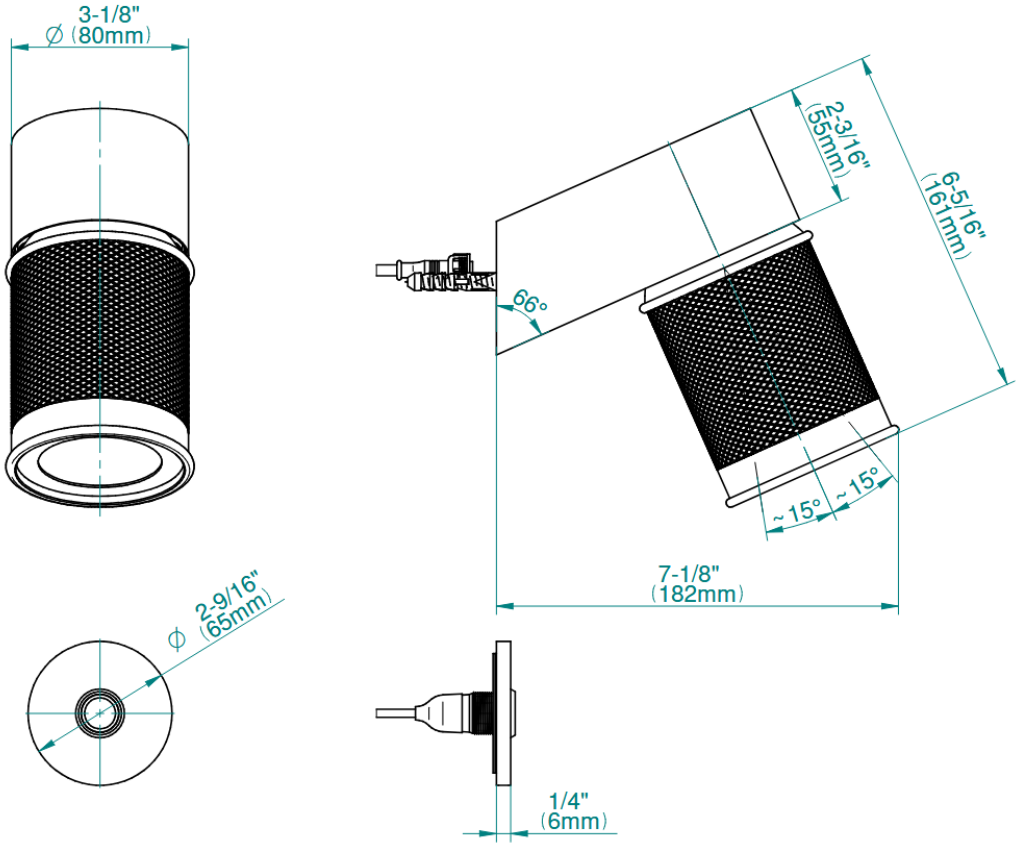
RIVA Collection
G-18201WTDF
RIVA Traditional wall-mount fluted knurl LED with wall-mount button