RIVA Collection
G-18201WTHP
RIVA Traditional wall-mount LED with wireless remote

Product Features

- 785 lumens
- Color temperature is 4000 K

Available Finishes

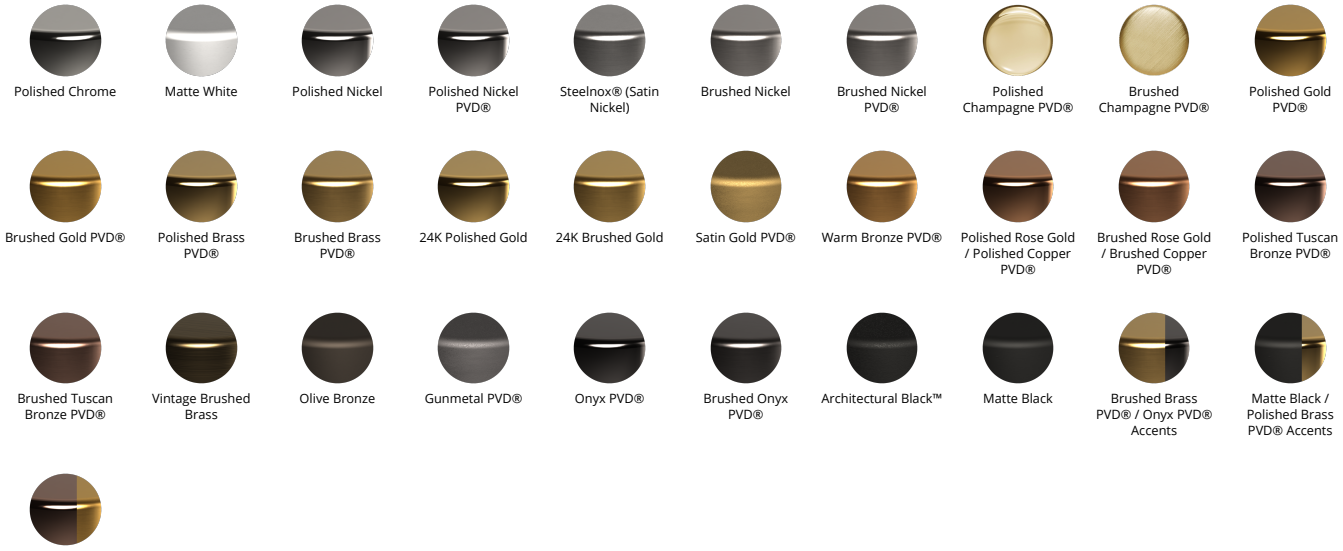

Polished Chrome | Matte White | Polished Nickel | Polished Nickel PVD® | Steelnox® (Satin Nickel) | Brushed Nickel | Brushed Nickel PVD® | Polished Champagne PVD® | Brushed Champagne PVD® | Polished Gold PVD®

Brushed Gold PVD® | Polished Brass PVD® | Brushed Brass PVD® | 24K Polished Gold | 24K Brushed Gold | Satin Gold PVD® | Warm Bronze PVD® | Polished Rose Gold / Polished Copper PVD® | Brushed Rose Gold / Brushed Copper PVD® | Polished Tuscan Bronze PVD®

Brushed Tuscan Bronze PVD® | Vintage Brushed Brass | Olive Bronze | Gunmetal PVD® | Onyx PVD® | Brushed Onyx PVD® | Architectural Black™ | Matte Black | Brushed Brass PVD® / Onyx PVD® Accents | Matte Black / Polished Brass PVD® Accents

Polished Tuscan Bronze PVD® / Brushed Gold PVD® Accents
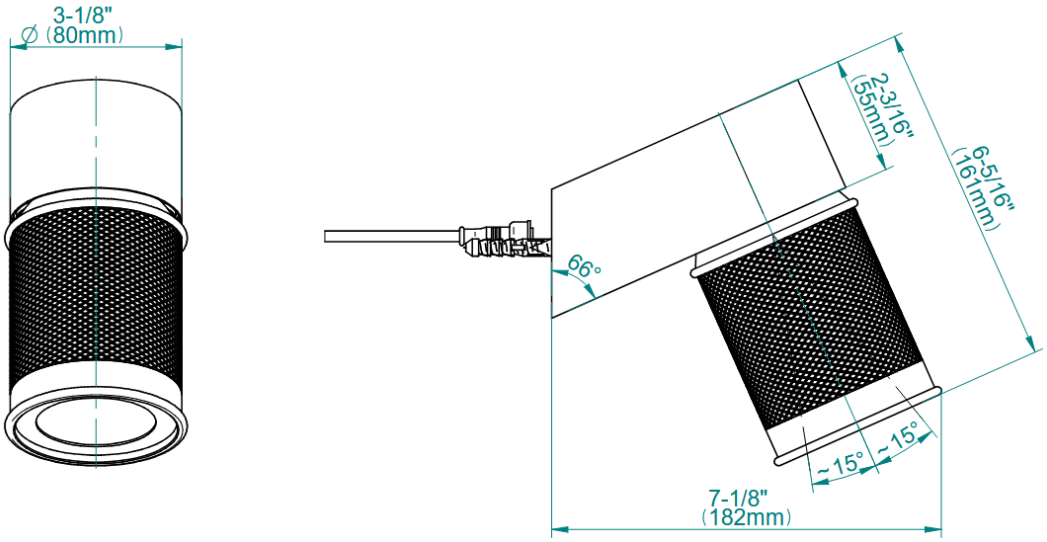
RIVA Collection
G-18201WTHP
RIVA Traditional wall-mount LED with wireless remote